CAD FILE:

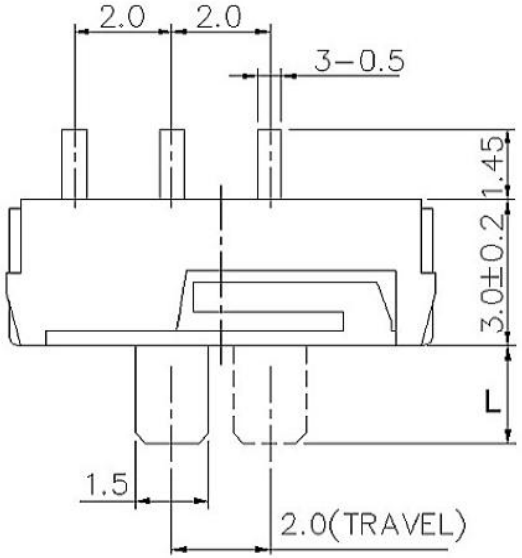

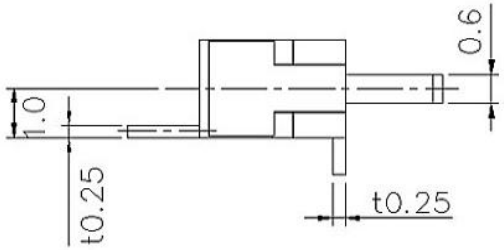

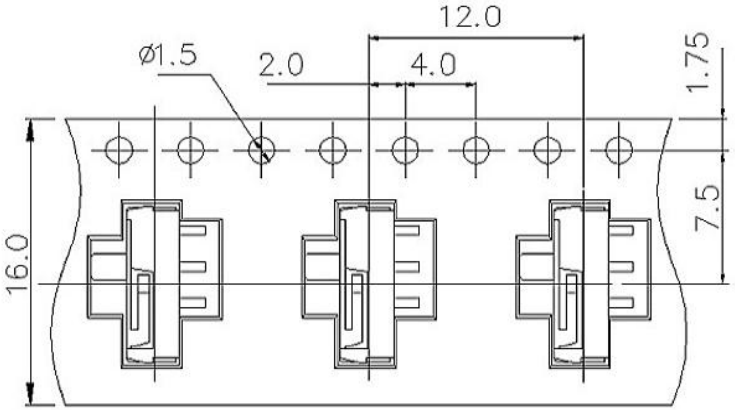

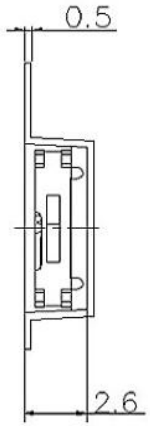

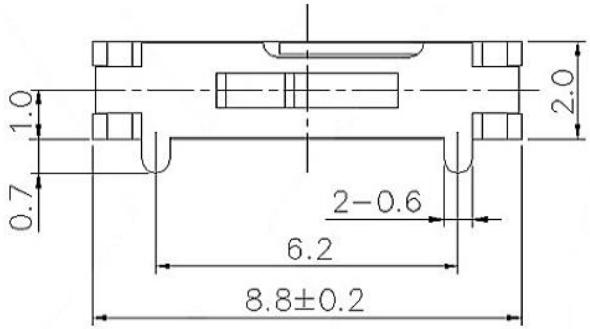

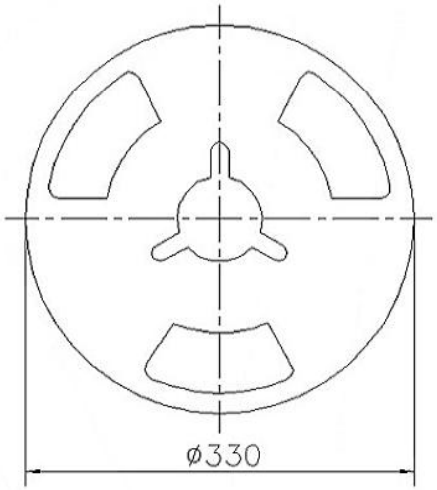

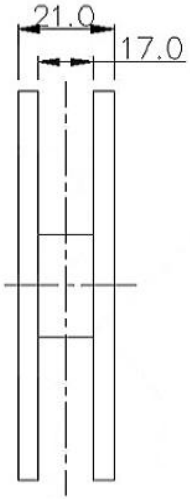

P.C.B MOUNTING HOLES

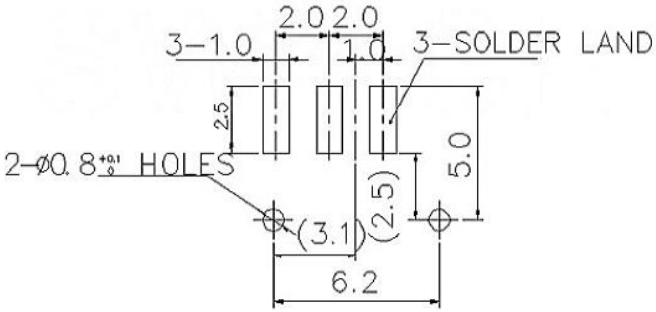

L
2.0
3.0
4.0

CIRCUIT DIAGRAM

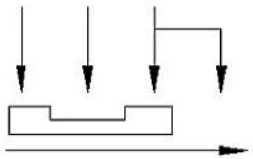

NO.	PARTS	MATERIALS	Q'TY	FINISH
8				
7	STEEL BALL	STEEL	1	NATURAL
6	SPRING	STEEL WIRE	1	NATURAL
5	CONTACT CLIP	PBS STRIP	2	Ag PLATED
4	TERMINAL	BRASS STRIP	8	Ag PLATED
3	BASE	PHENOLIC RESIN	1	NATURAL
2	FRAME	STEEL STRIP	1	Ni PLATED
1	KNOB	POM	1	BLACK

TOLERANCE UNLESS SPECIFIED

WITHIN		
OVER		

ISSUE	DATE	DESCRIPTIONS OF REVISION	APPD.
A	2012-10-26	初 版	

TITLE : SLIDE SWITCH

MODEL:

UNIT : mm

SCALE: 3:1

DRWG NO.:

DWN.		2012-10-26
CHK'D		2012-10-26
APPD.		

東莞市高迪電子有限公司
DONGGUAN GAODI ELECTRONICS CO., LTD.